



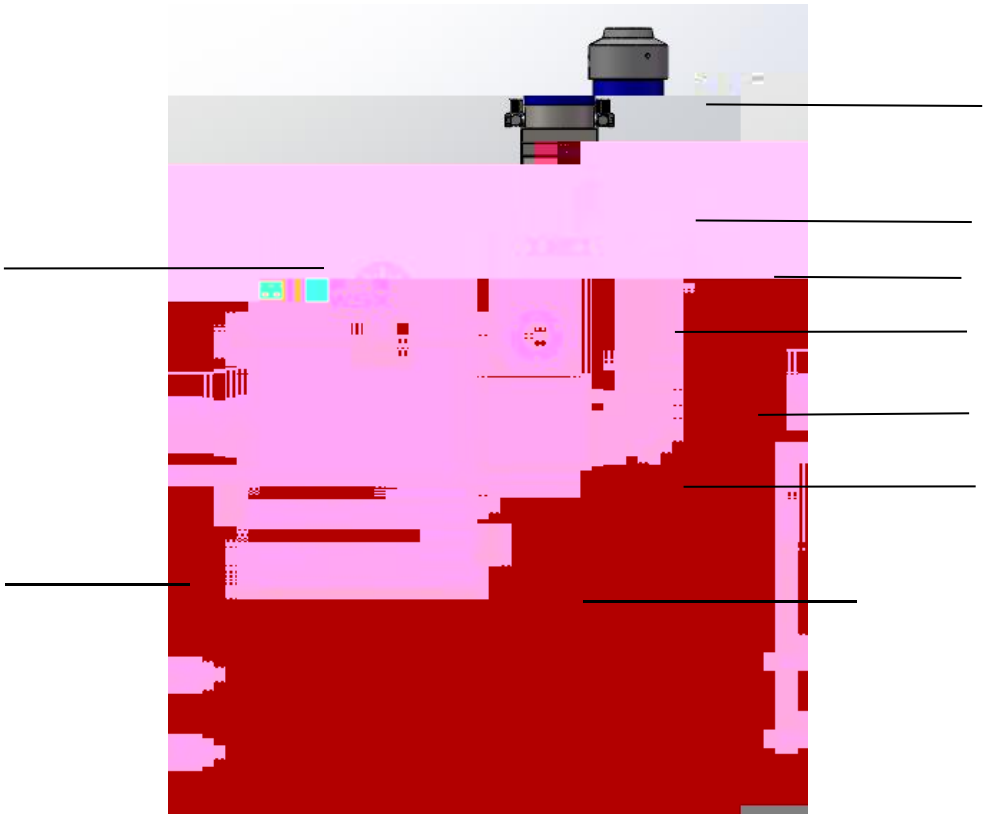



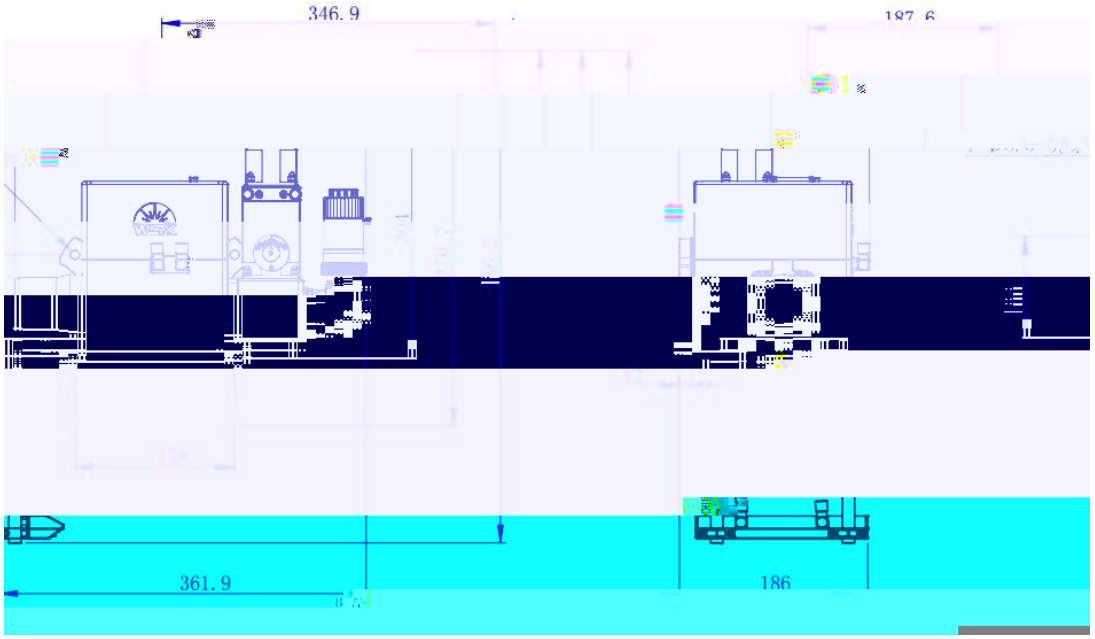
346.9
187.6
361.9
186

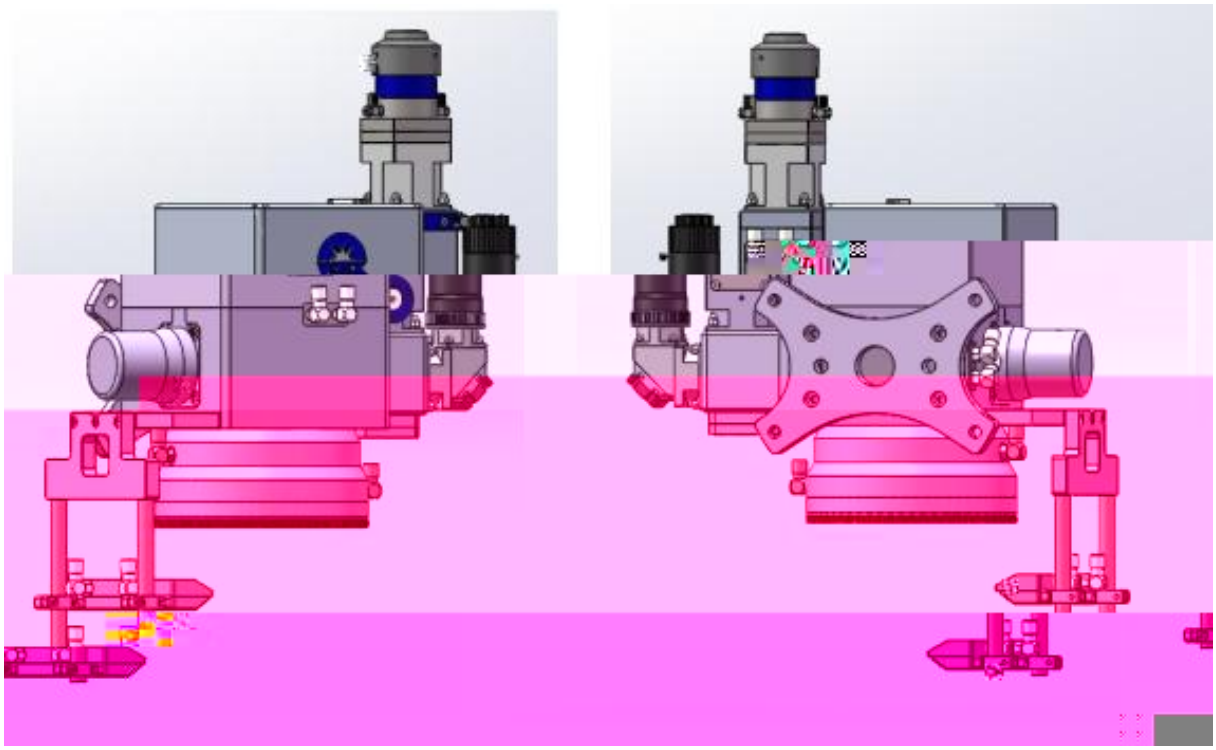

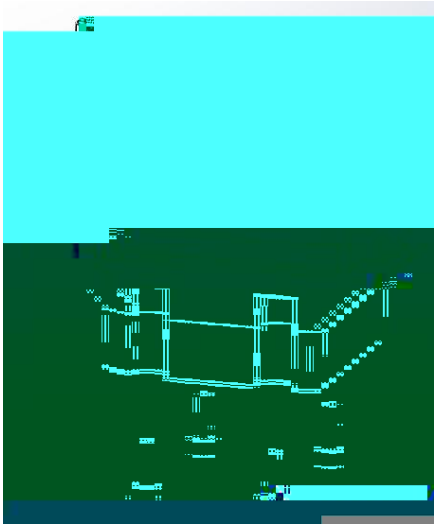

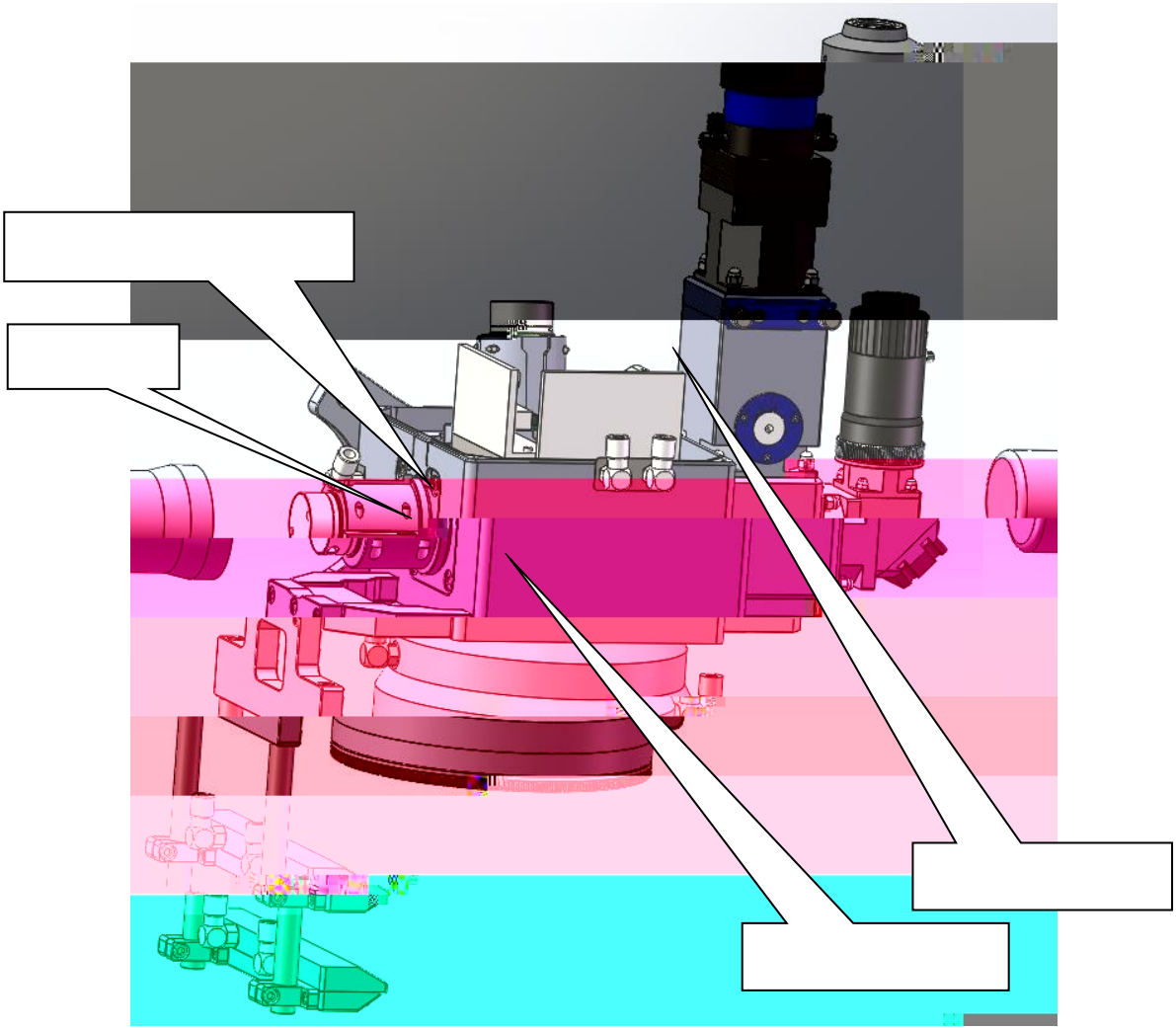

7. Electrical

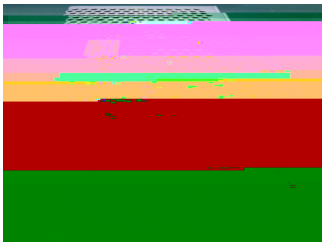

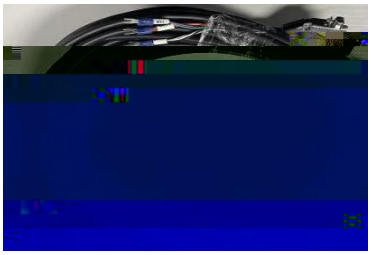

HO

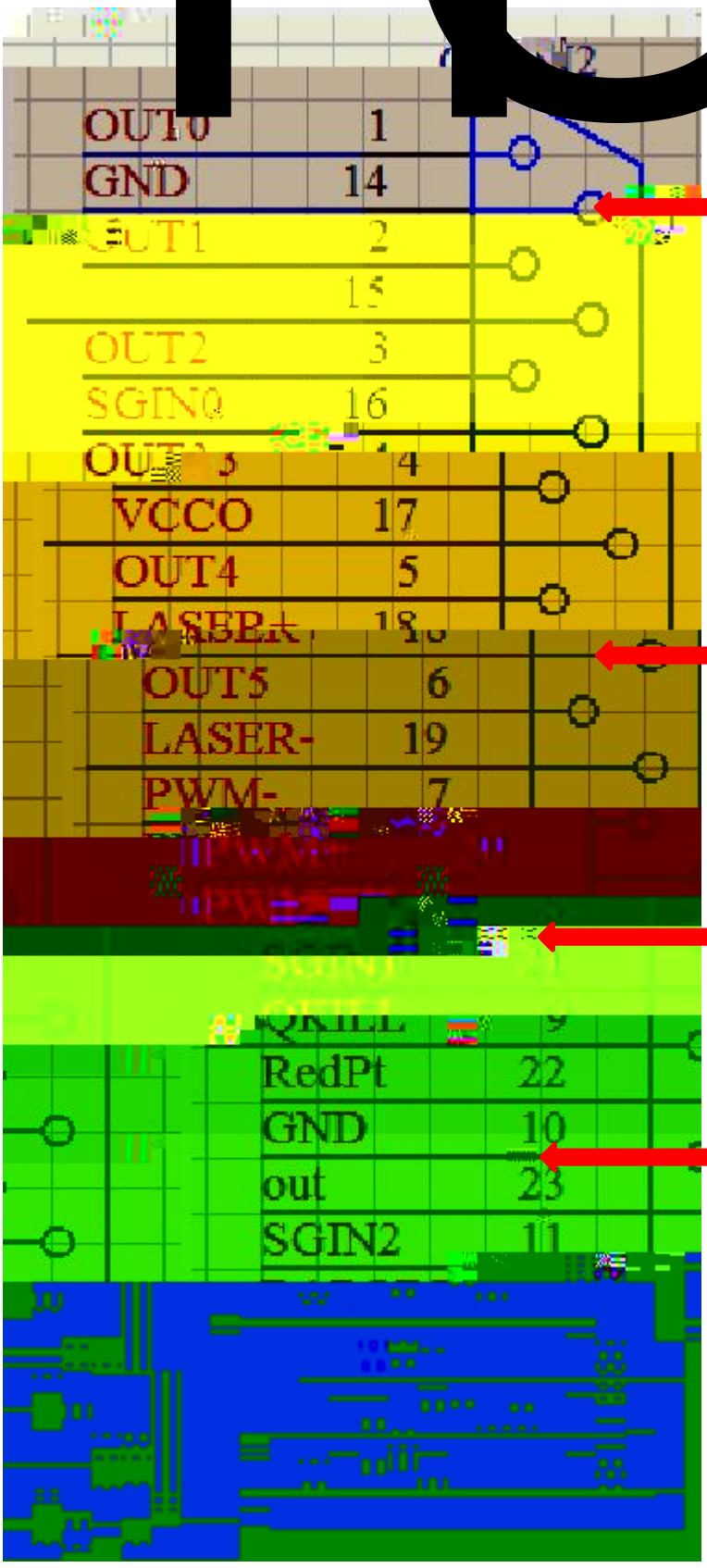
OUT0 1
GND 14
OUT1 2
OUT2 3
SGIN0 16
VCCO 17
OUT4 5
OUT5 6
LASER- 19
PWM- 7
RedPt 22
GND 10
out 23
SGIN2 11

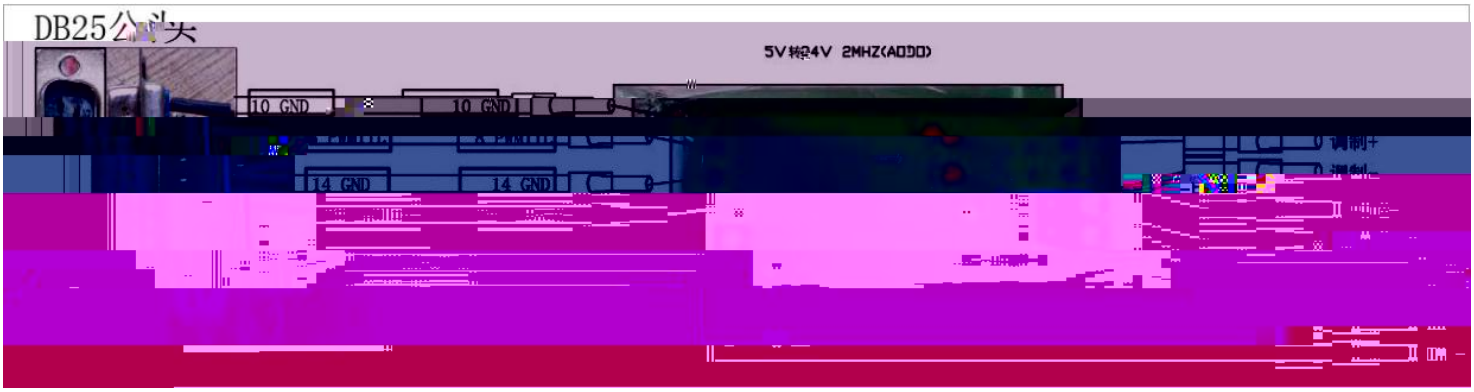
DB25公头
5V转24V 2MHZ(AODD)
10 GND
10 GND
14 GND
14 GND

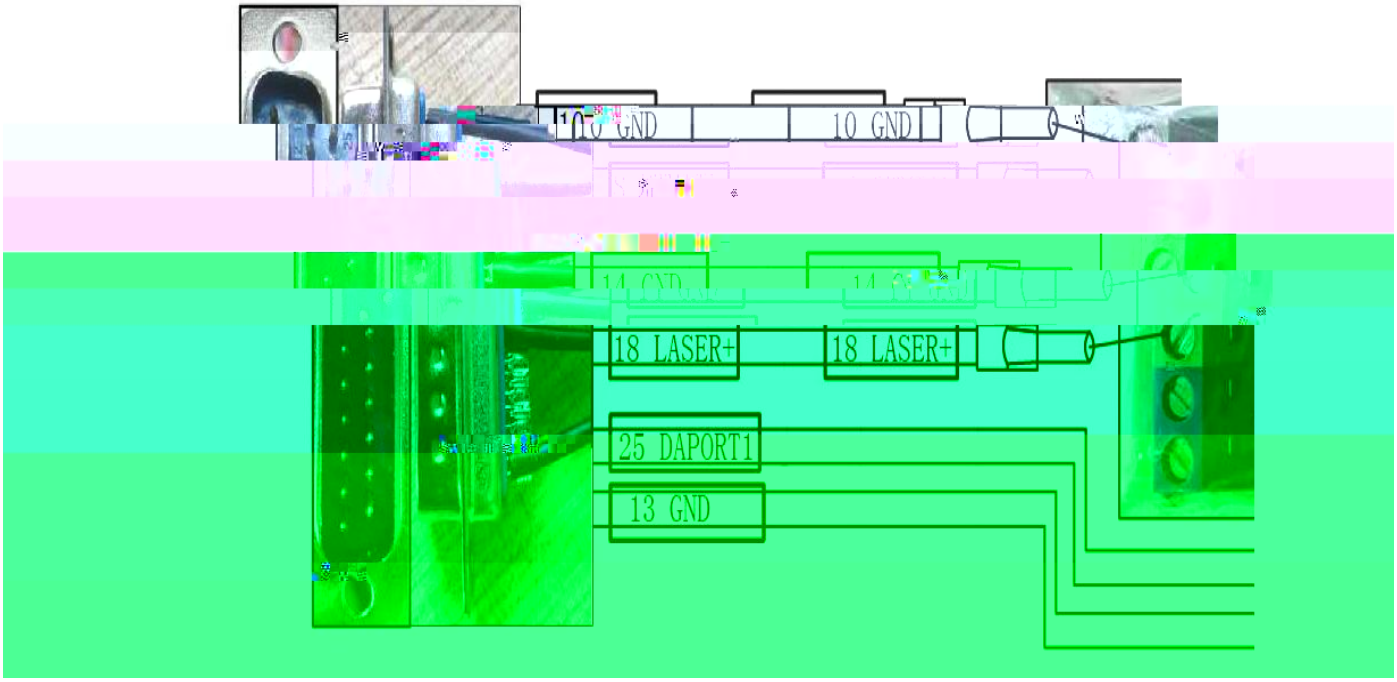
10 GND
10 GND
14 GND
14 GND
18 LASER+
18 LASER+
25 DAPORT1
13 GND

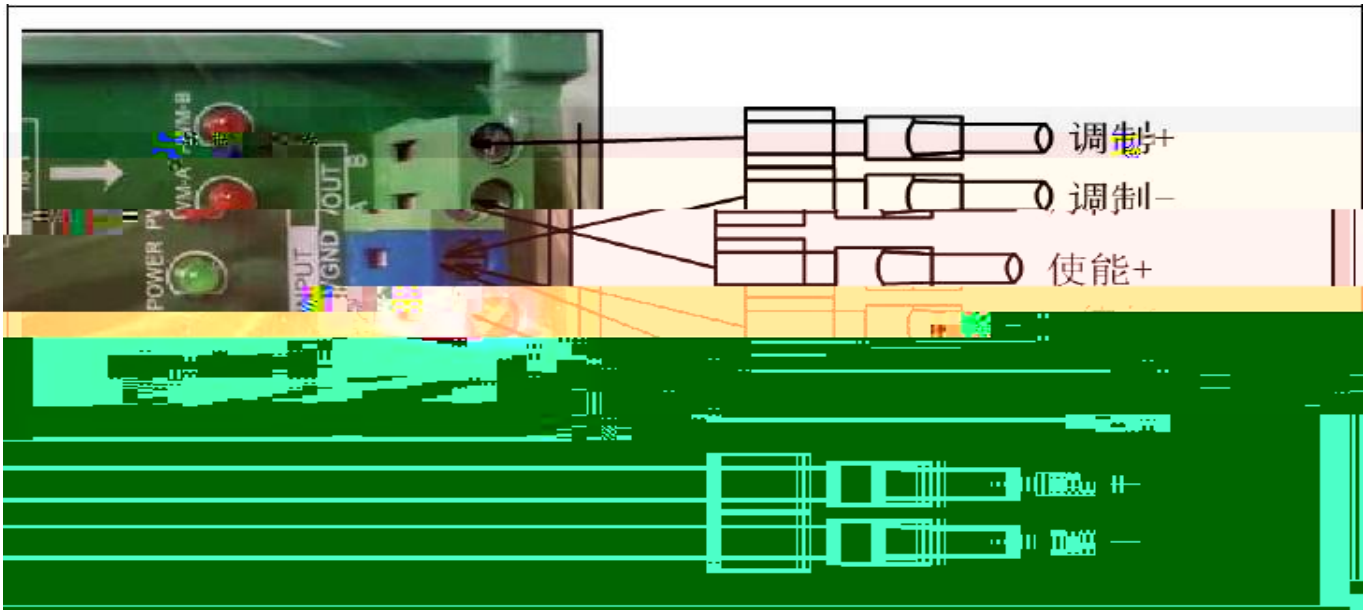
调制+
调制-
使能+

