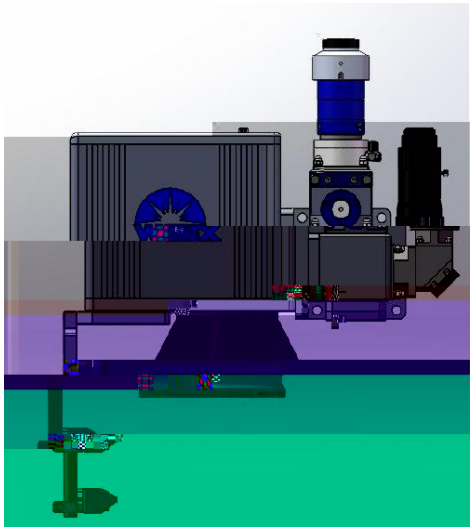

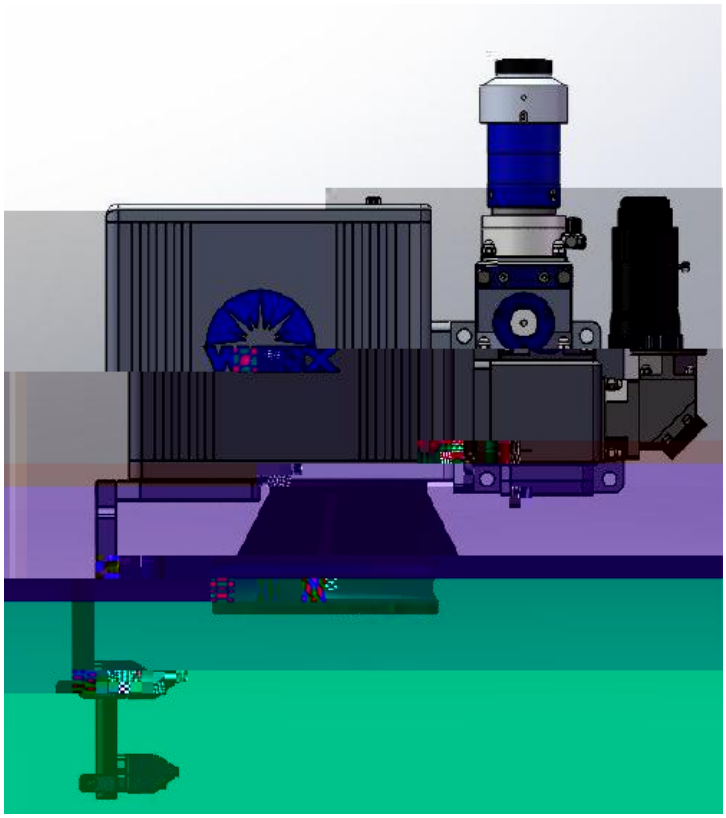

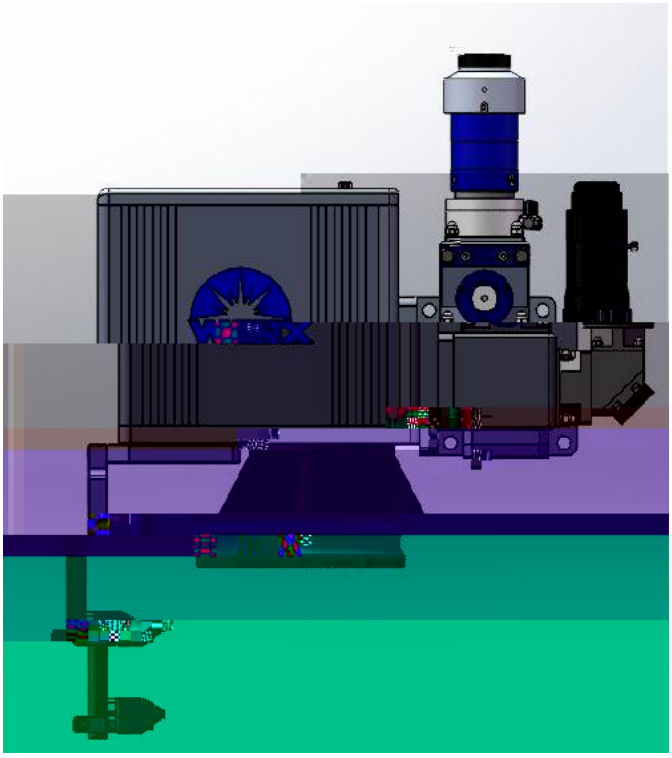

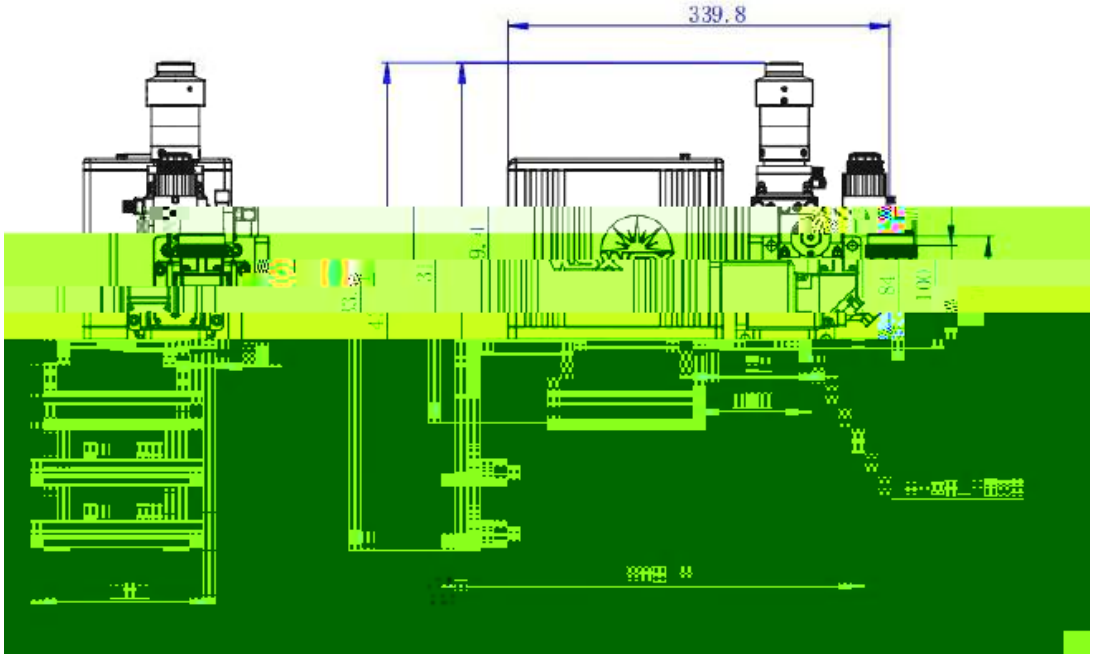
339.8

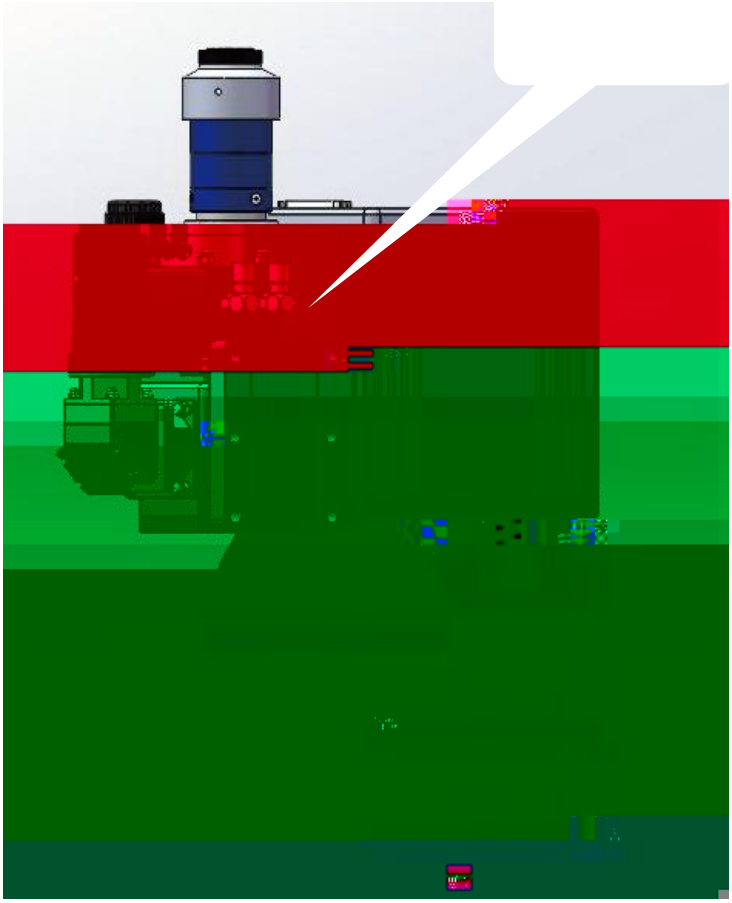

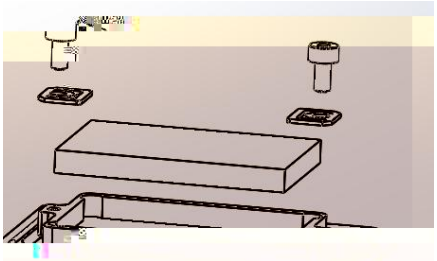

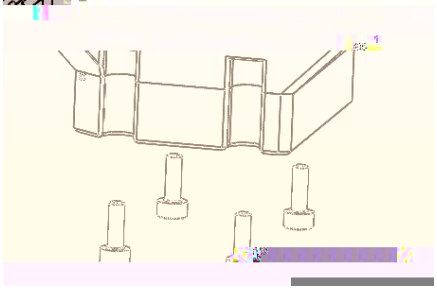

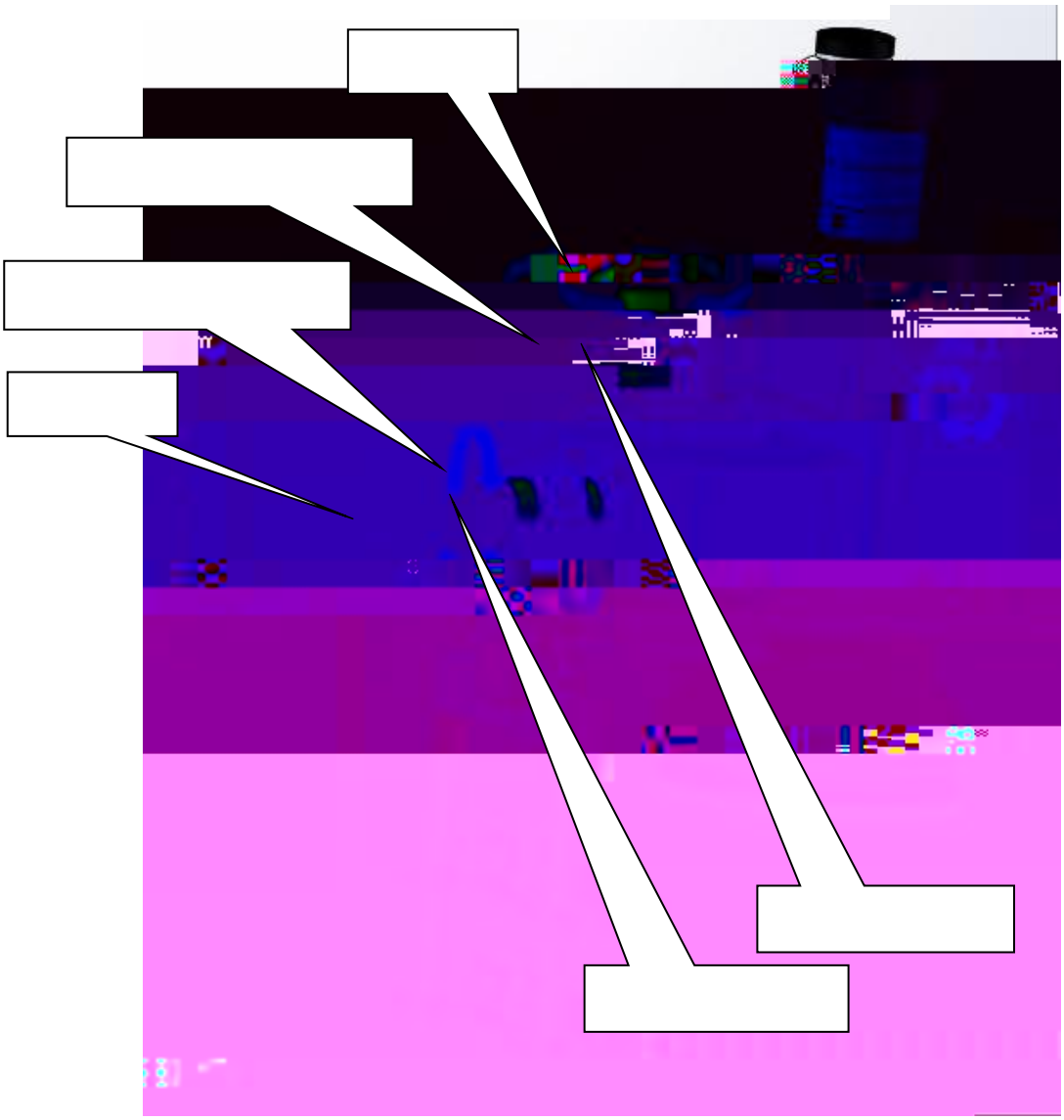

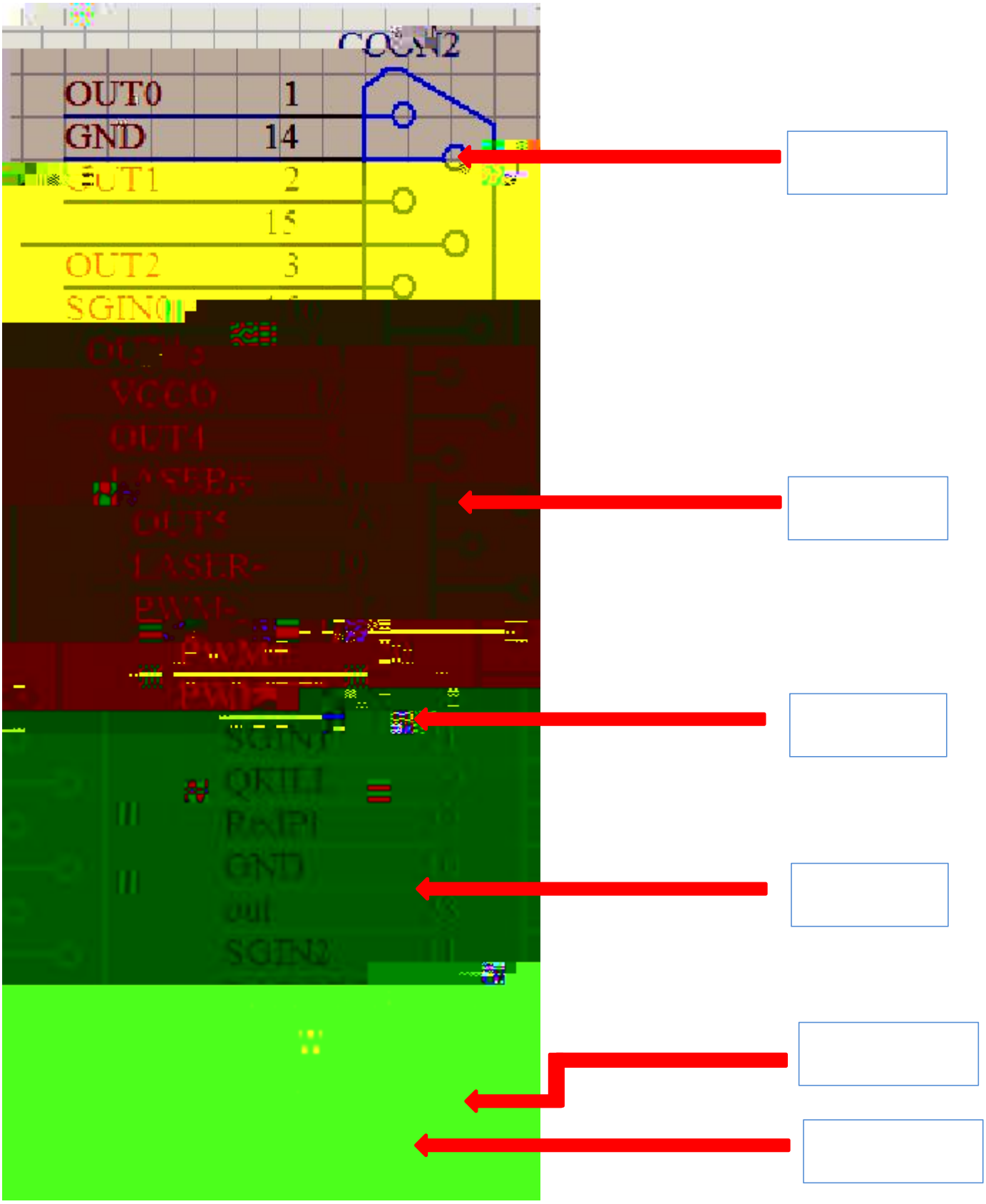
CCON2
OUT0 1
GND 14
OUT1 2
15
OUT2 3
SGIN0
VCCO
OUT4
OUT5
LASER-
PWM-
PWM
PWD
SGIN1
QKILI
RxIPI
GND
out
SGIN2

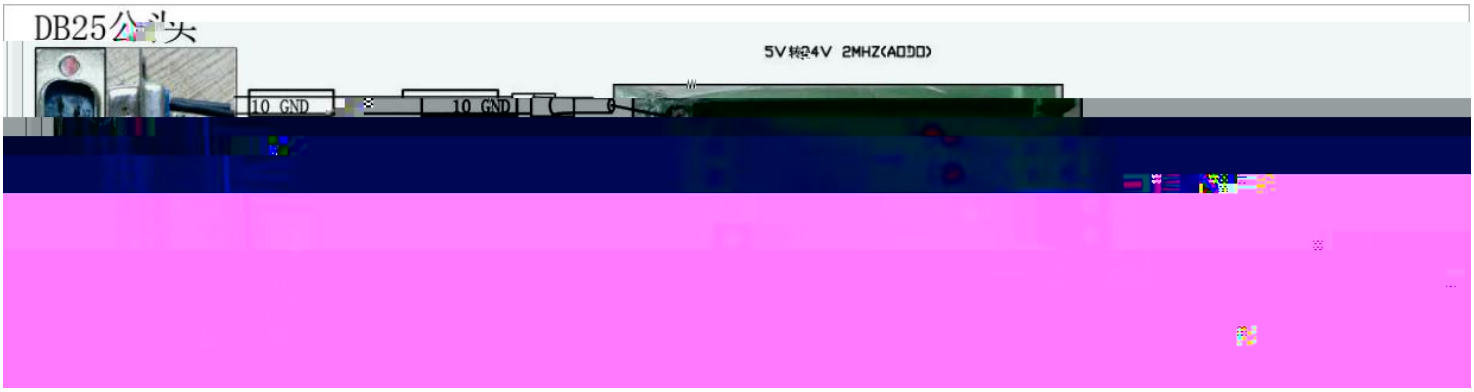
DB25公头
5V转24V 2MHZ(ADDD)
10 GND
10 GND

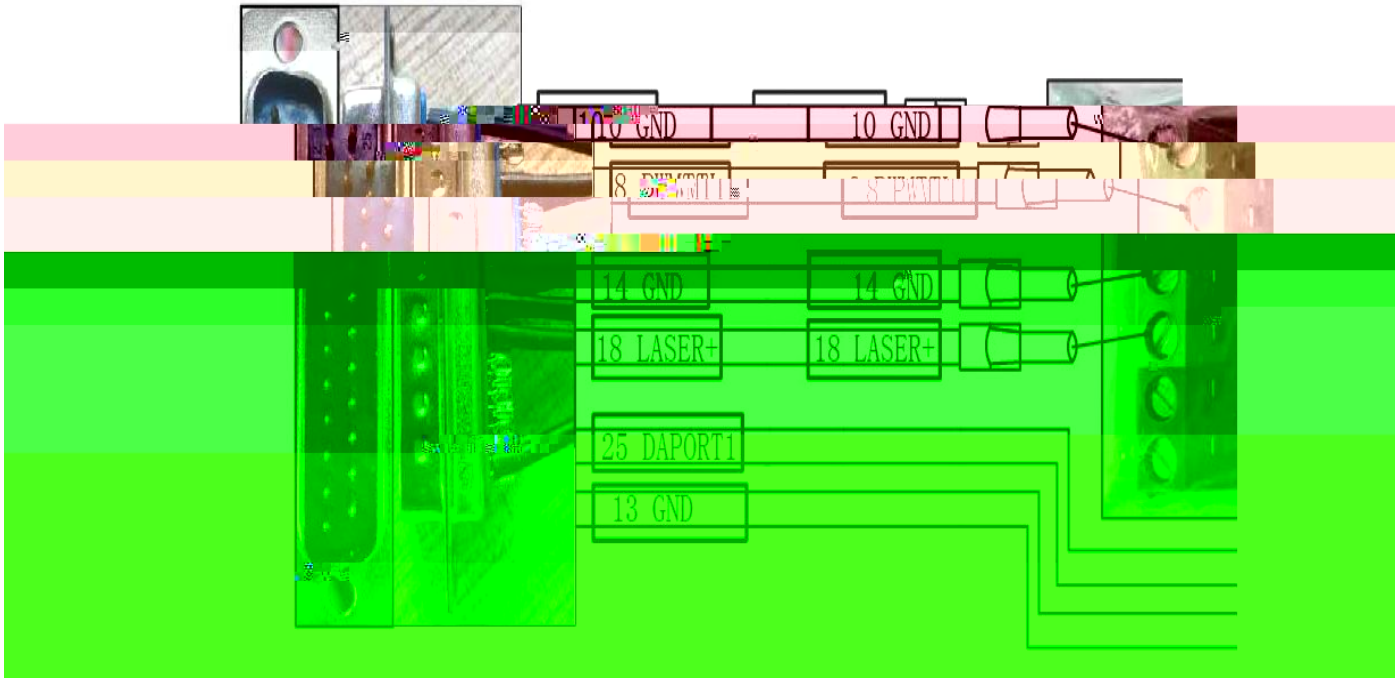
10 GND
10 GND
14 GND
14 GND
18 LASER+
18 LASER+
25 DAPORT1
13 GND

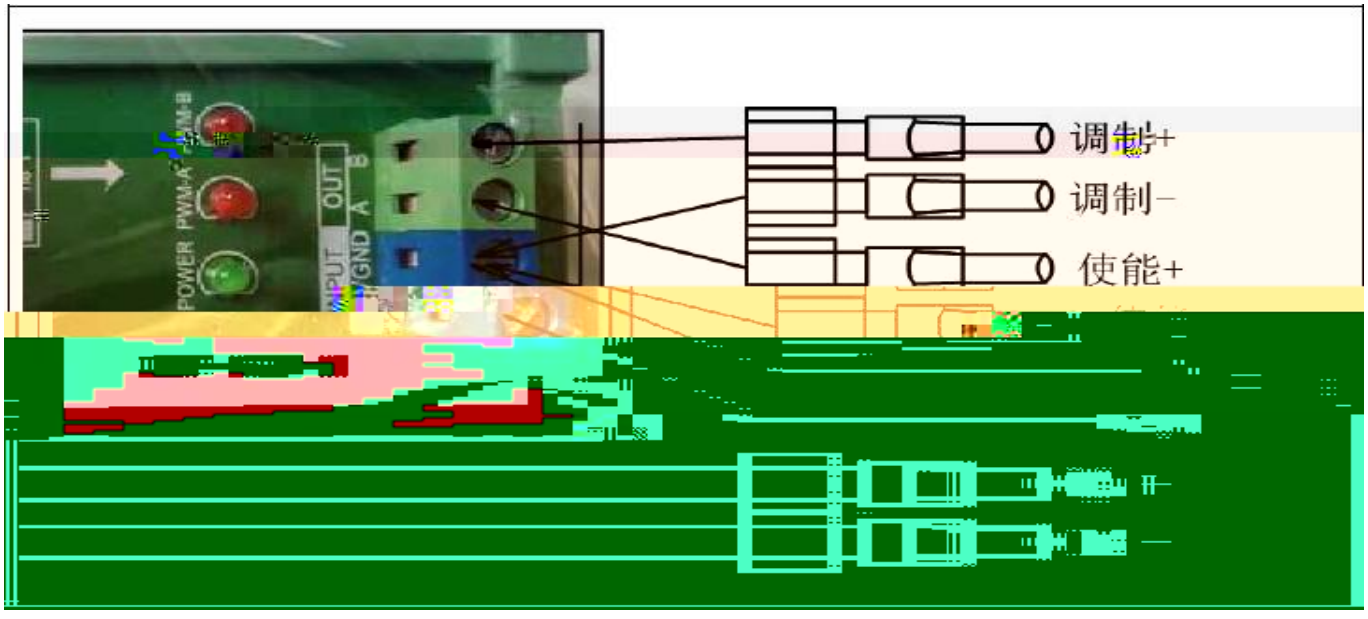
POWER PWM-A PWM-B
INPUT GND A B OUT
调制+
调制-
使能+

