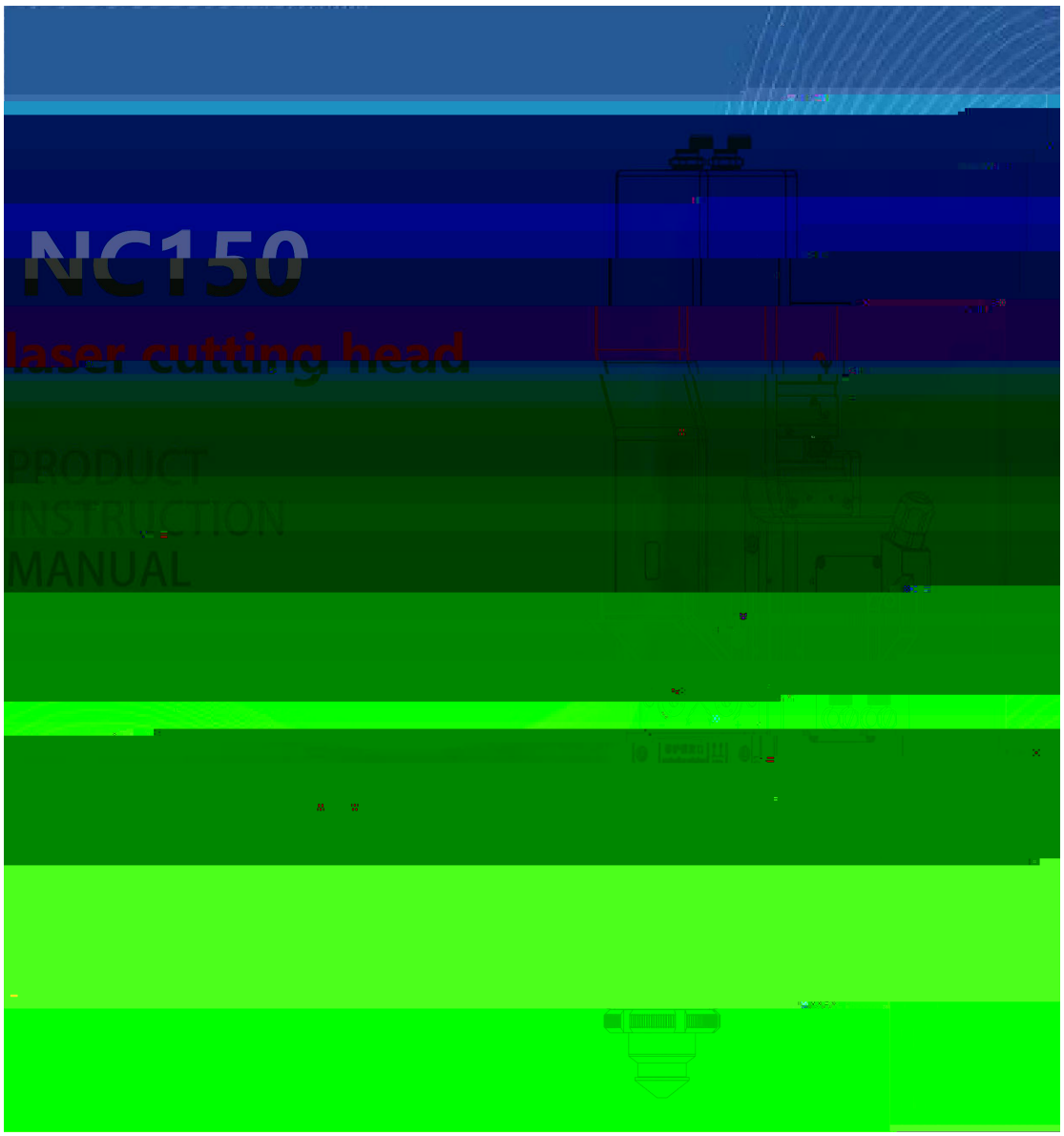

NC150 high power auto-focus fiber laser cutting head

Intelligent Monitoring System

Structure and function introduction

1. Product structure

1.1 Structure diagram

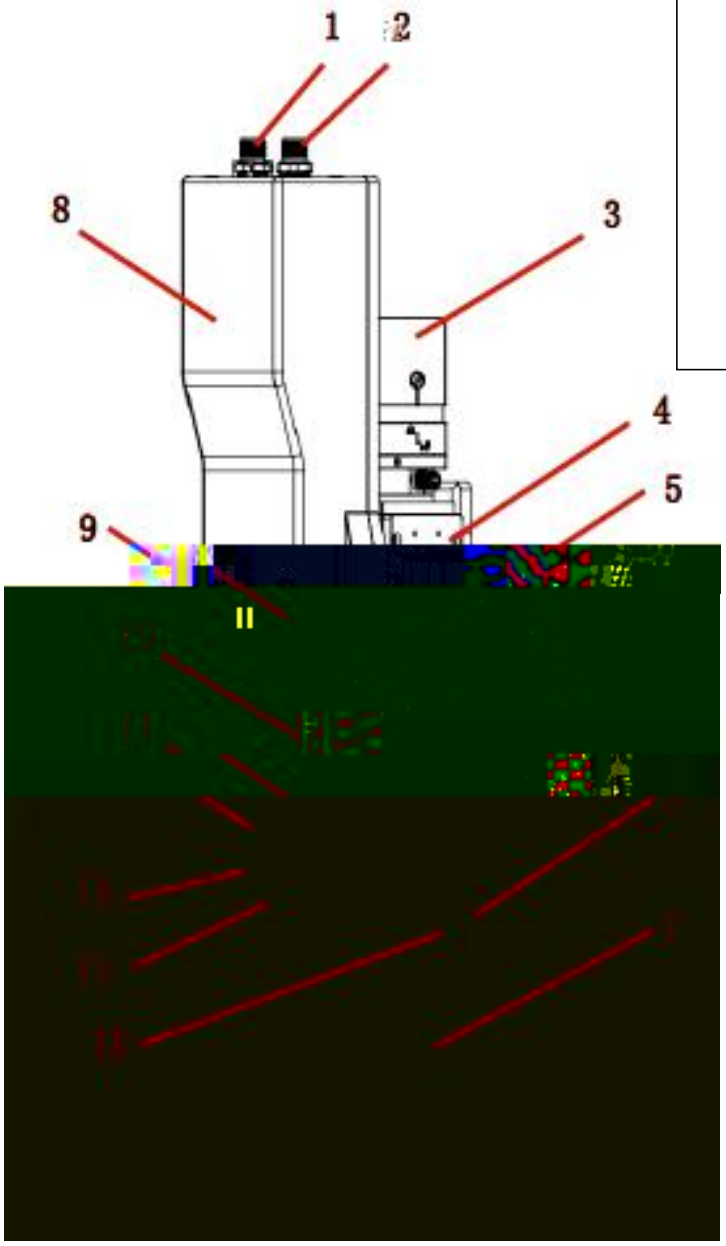

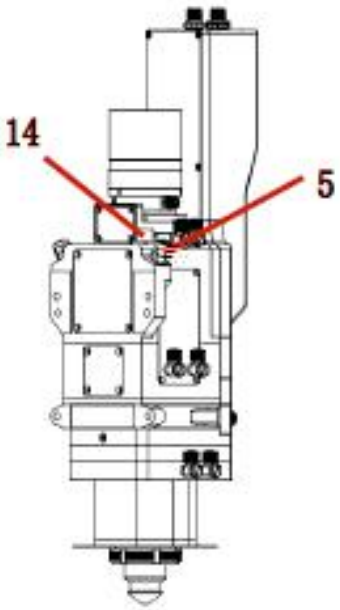

2. Installation size

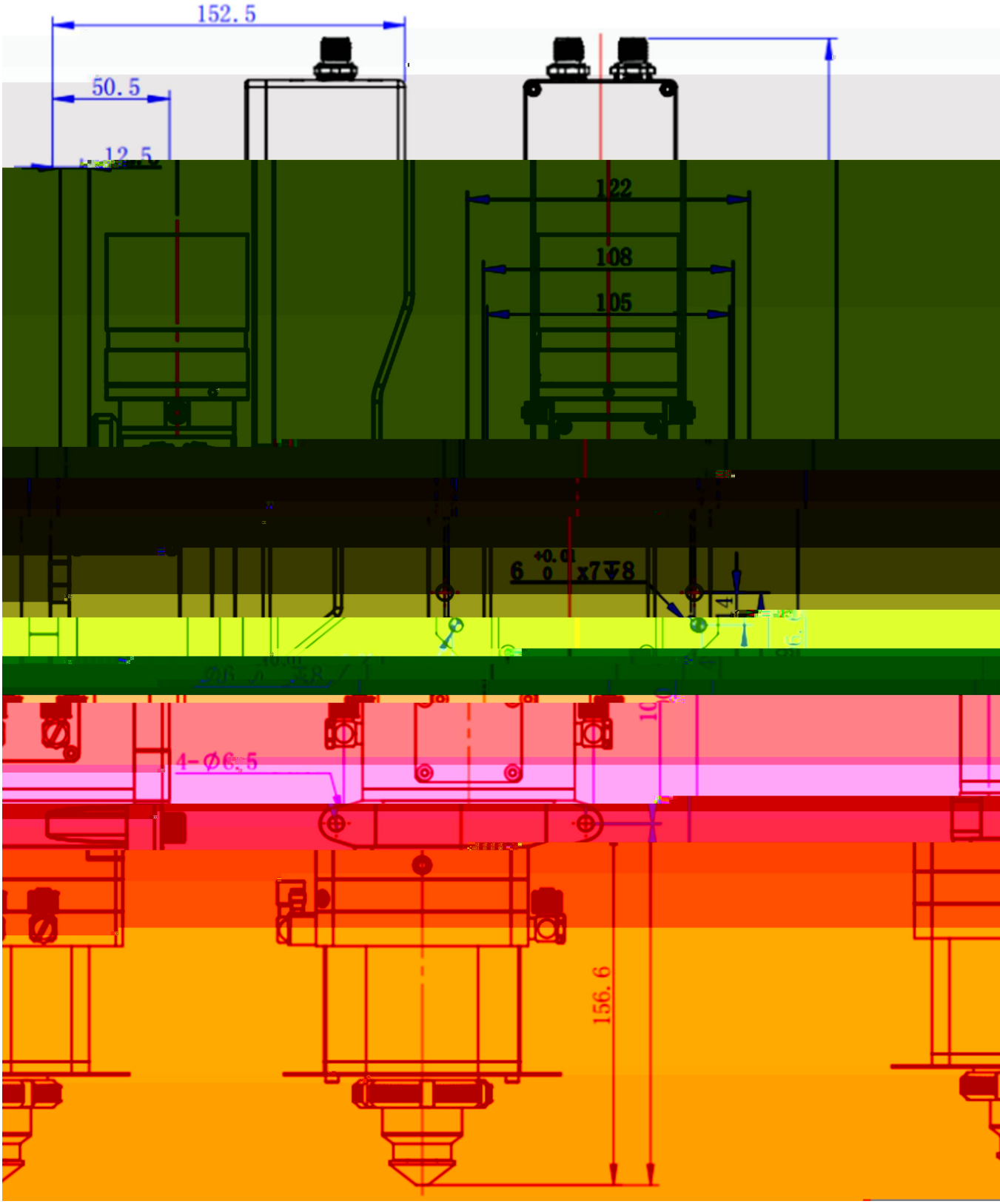

3. Basic parameters

4. Monitoring system

4.1 Ct ನ

4.3 Monitoring system process mode alarm threshold setting interface

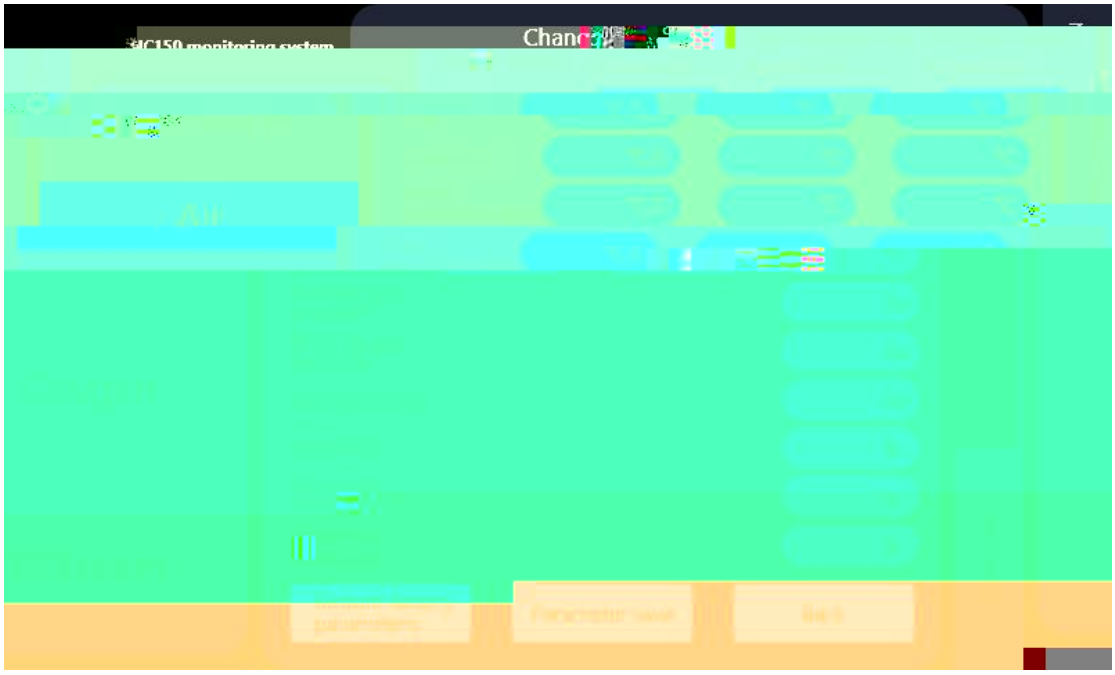


NC150 monitoring system
MAIN CONTROL PAGE
Gas pressure detection:
Turn on/off
Sensor name
Collimator lens
Focus lens
Upper protective glass
Lower protective glass
Temperature change rate
0.0 °C/s
Cutting gas pressure
0.02 Bar
Gas pressure correction
Turn on/off
Gas pressure calibration
TEST PAGE
Curve information
Gas pressure configuration
Details
NC150 monitoring system
Gas pressure calibration list
V
Bar
Air
Tips
Parameters saved successfully!