HZ14A

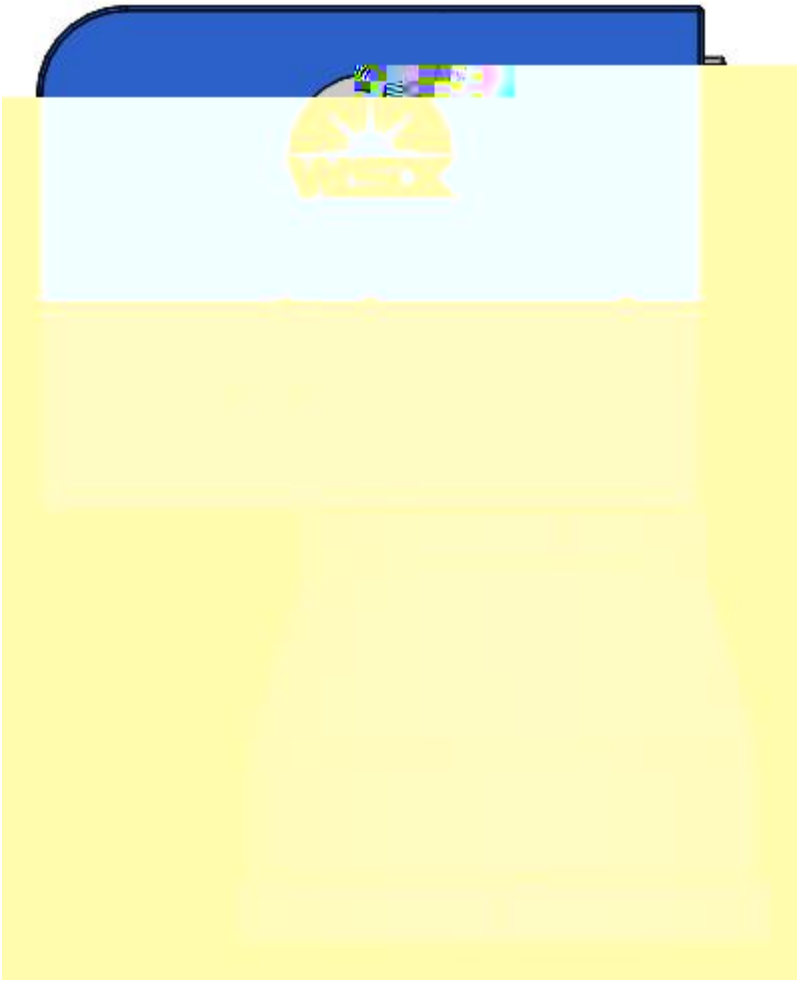



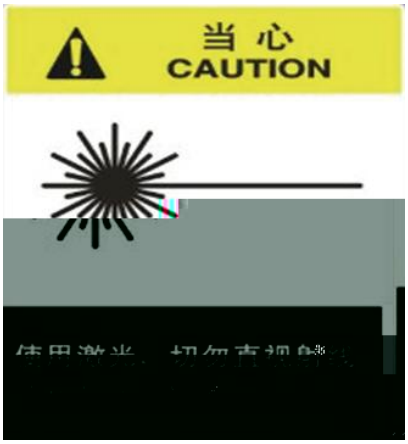

DIN

EN207 BGV B2



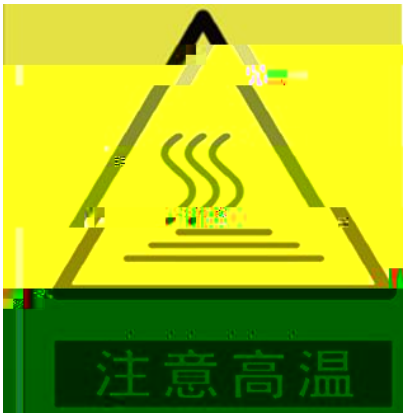



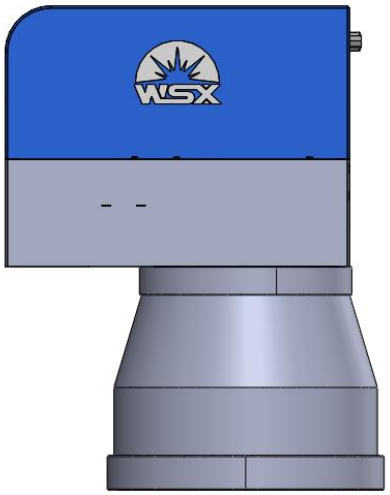

ÿ

Ö ñ1„`RU(P •6ai ÷

2î

2î

%6P i (6(dx

1
----------1
1.1
----------3
1.2
----------4
1.3
----------4-5
1.5
----------5
1.6
----------6
1.7
----------6
1.8
----------7
1.9
----------7

1.1

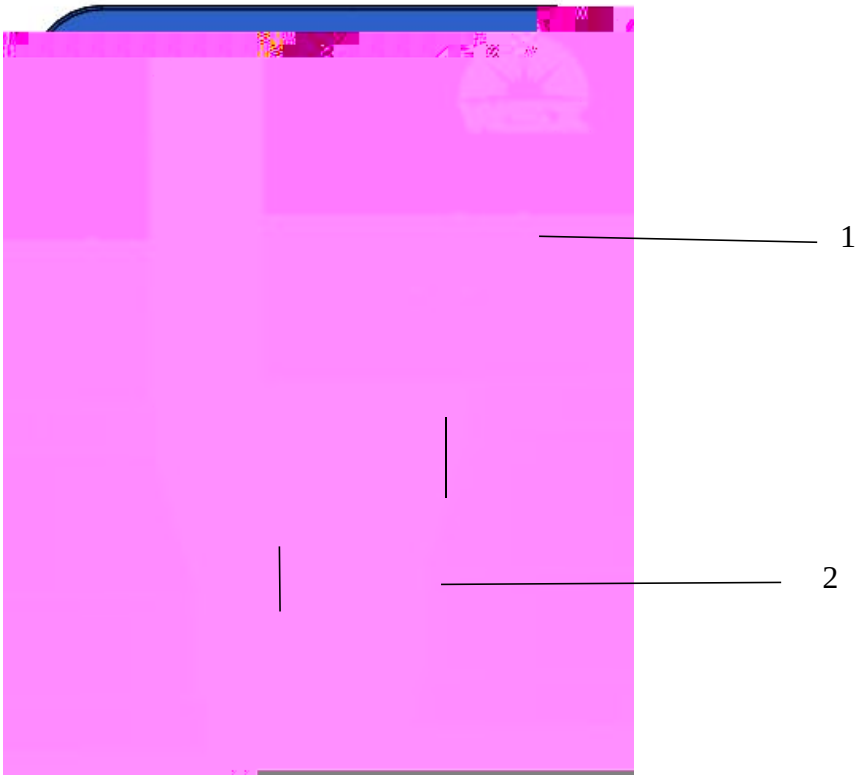

1	
2	

–

–



1.
2. 500ml
3.

1.
2.
3.
4. -

1.6

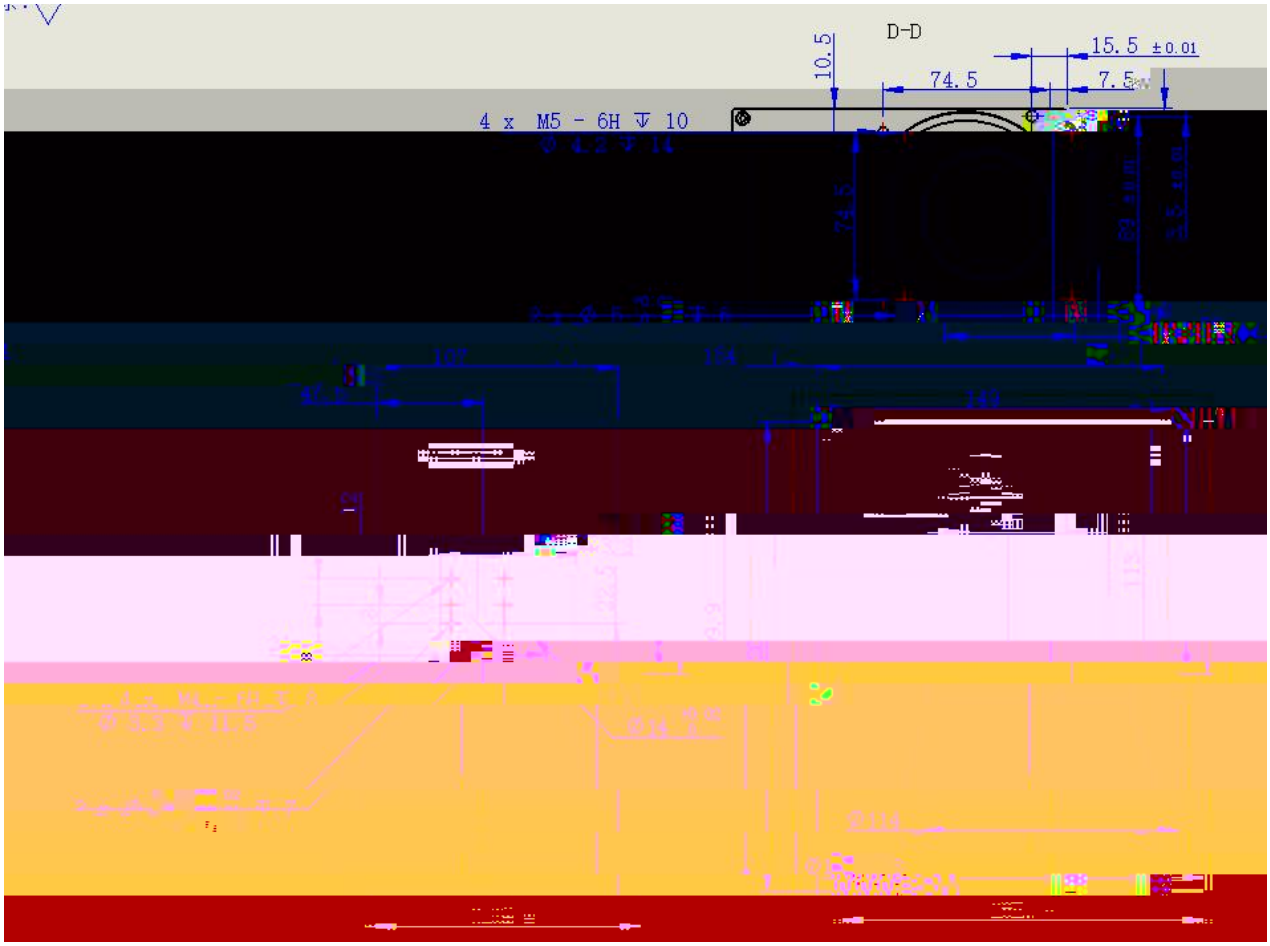

1.7

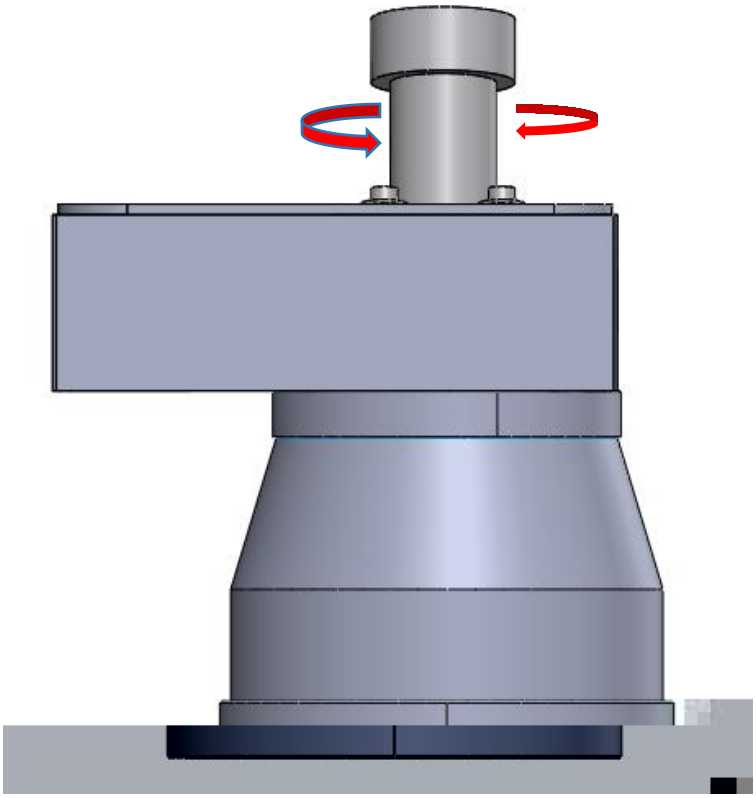

*XY

1.8

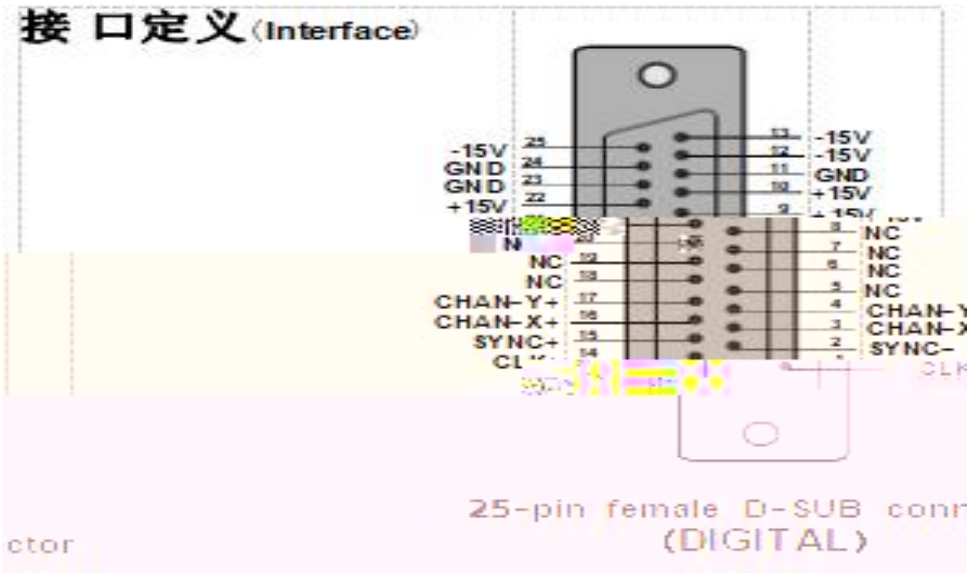
接 口定义(Interface)
-15V
GND
GND
+15V
N
NC
NC
CHAN-Y+
CHAN-X+
SYNC+
-15V
-15V
GND
+15V
NC
NC
NC
NC
SYNC-
25-pin female D-SUB conn
ctor
(DIGITAL)



地　　址：广东省深圳市龙华新区大浪街道浪口工业园青年梦工厂3栋3楼
Address : 3rd Floor 3, Building 3, Langkou Industrial Zone, Dalang, Longhua District, Sh